EIS 3 - QUARTER SERVICE CENTER

LEGEND

NACE Activity with actors already uploaded in the GDSE

NACE Activity with no actors uploaded in the GDSE

STATUS QUO

Flow data uploaded in GDSE

No flow data in GDSE

PROPOSED PROCESS

Modified flow

Shifted flow

Suffix / prefix flow

New flow

Reference flow

Affected flow

flow towards the environment (not accounted for in the GDSE)

I_1 Implementation area

Food waste → Orange peel Material change

[I-5610 : E-3821] Flow reference

1 Order of implementation

0-100%
How much orange peel waste will be used? Parametric number chosen during the workshop

STATUS QUO

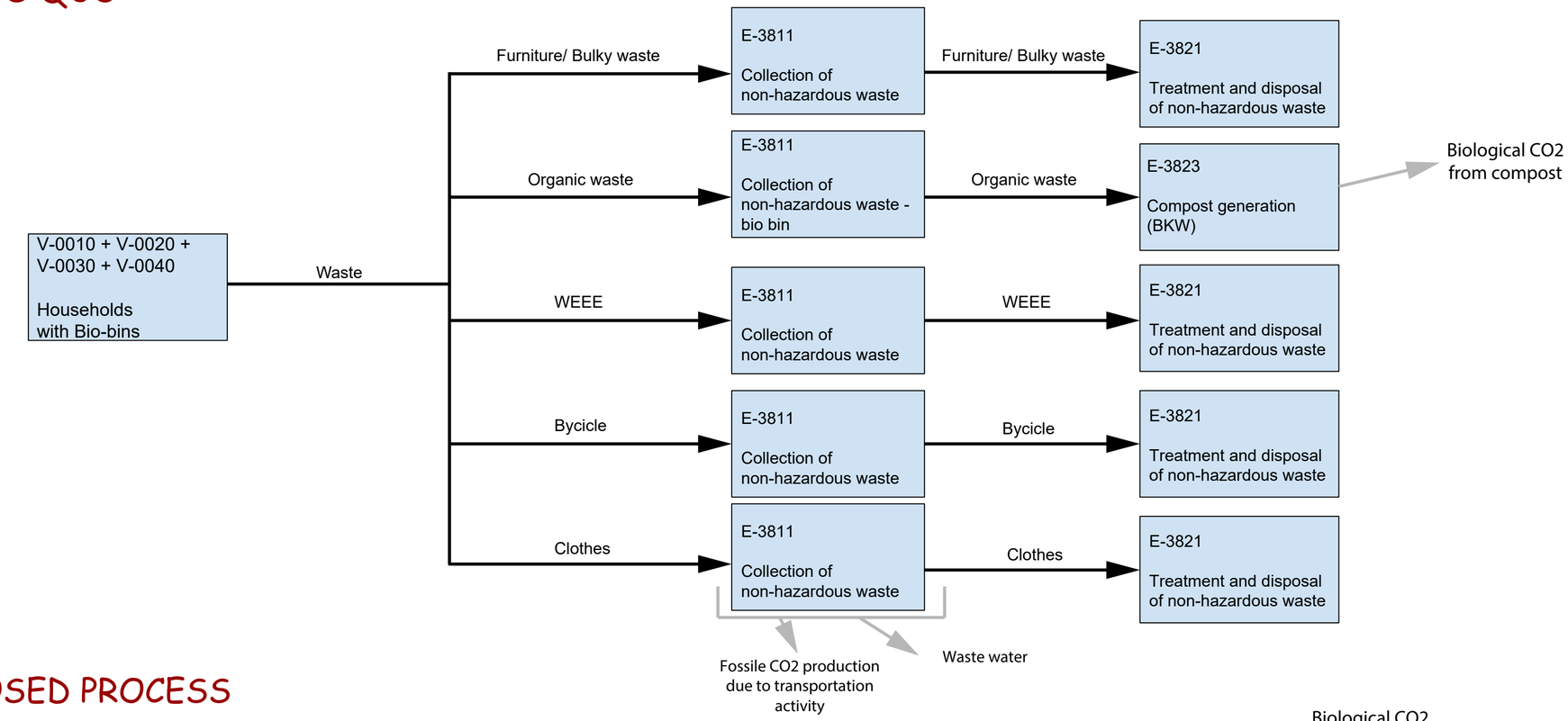

PROPOSED PROCESS

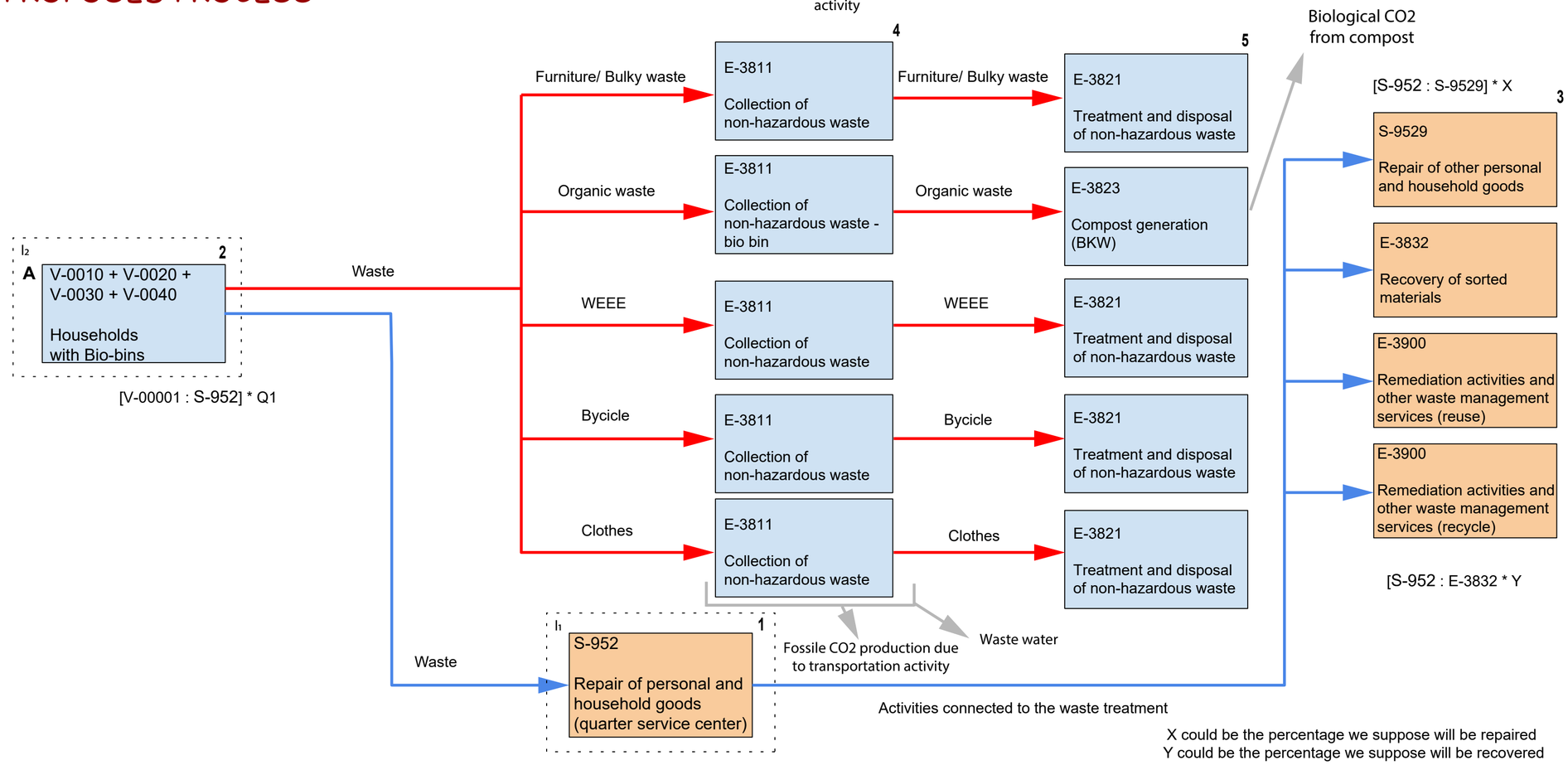

X could be the percentage we suppose will be repaired
Y could be the percentage we suppose will be recovered